Planet

Plants Container System

LEMÓN™

UPSCALE
URBAN
FURNITURE

עיצוב אלון דרורי

www.lemon-collection.com

INNOVATION IN THE PUBLIC SPACE

ריהוט אורבאני ייחודי

Planet

Plants Container System

Planet is an elegant plants container system for urban public spaces and garden environments. The system uses simple clean lines and made of high quality materials.

Design by LEMON

COPYRIGHT © LEMON - UPSCALE URBAN FURNITURE LTD. 1995. ALL RIGHTS RESERVED.

www.lemon-collection.com

Planet

Plants Container System

T 1

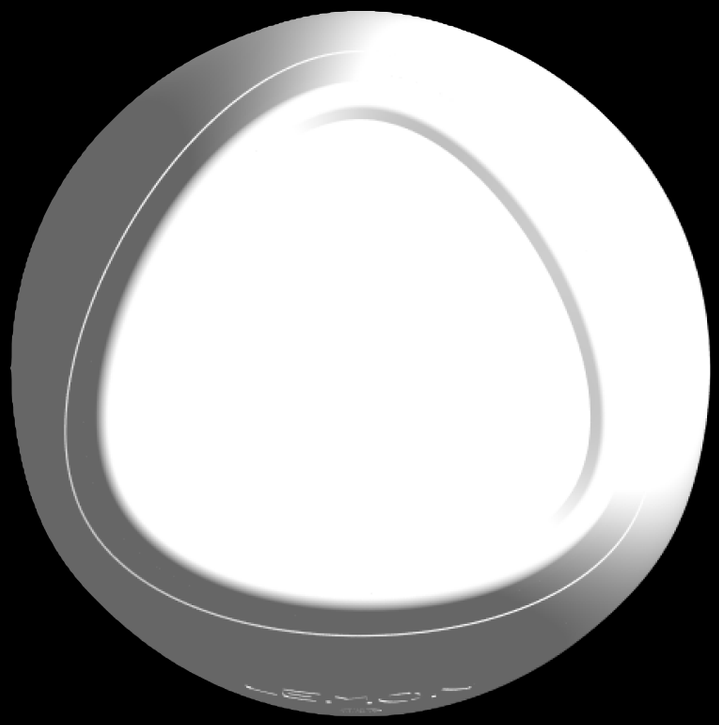

LEMON™

Design by LEMON

COPYRIGHT © LEMON - UPSCALE URBAN FURNITURE LTD. 1995. ALL RIGHTS RESERVED.

www.lemon-collection.com

Planet

Plants Container System

T 1

LEMON™

Design by LEMON

COPYRIGHT © LEMON - UPSCALE URBAN FURNITURE LTD. 1995. ALL RIGHTS RESERVED.

www.lemon-collection.com

Planet T1

Plants Container System

LEMON™

Design by LEMON

COPYRIGHT © LEMON - UPSCALE URBAN FURNITURE LTD. 1995. ALL RIGHTS RESERVED.

Planet T1

Plants Container System

LEMON™

Design by LEMON

COPYRIGHT © LEMON - UPSCALE URBAN FURNITURE LTD. 1995. ALL RIGHTS RESERVED.

Planet T1

Plants Container System

LEMÓN™

Design by LEMON

COPYRIGHT © LEMON - UPSCALE URBAN FURNITURE LTD. 1995. ALL RIGHTS RESERVED.

LEMON™
Design by LEMON

Planet T1

Plants Container System

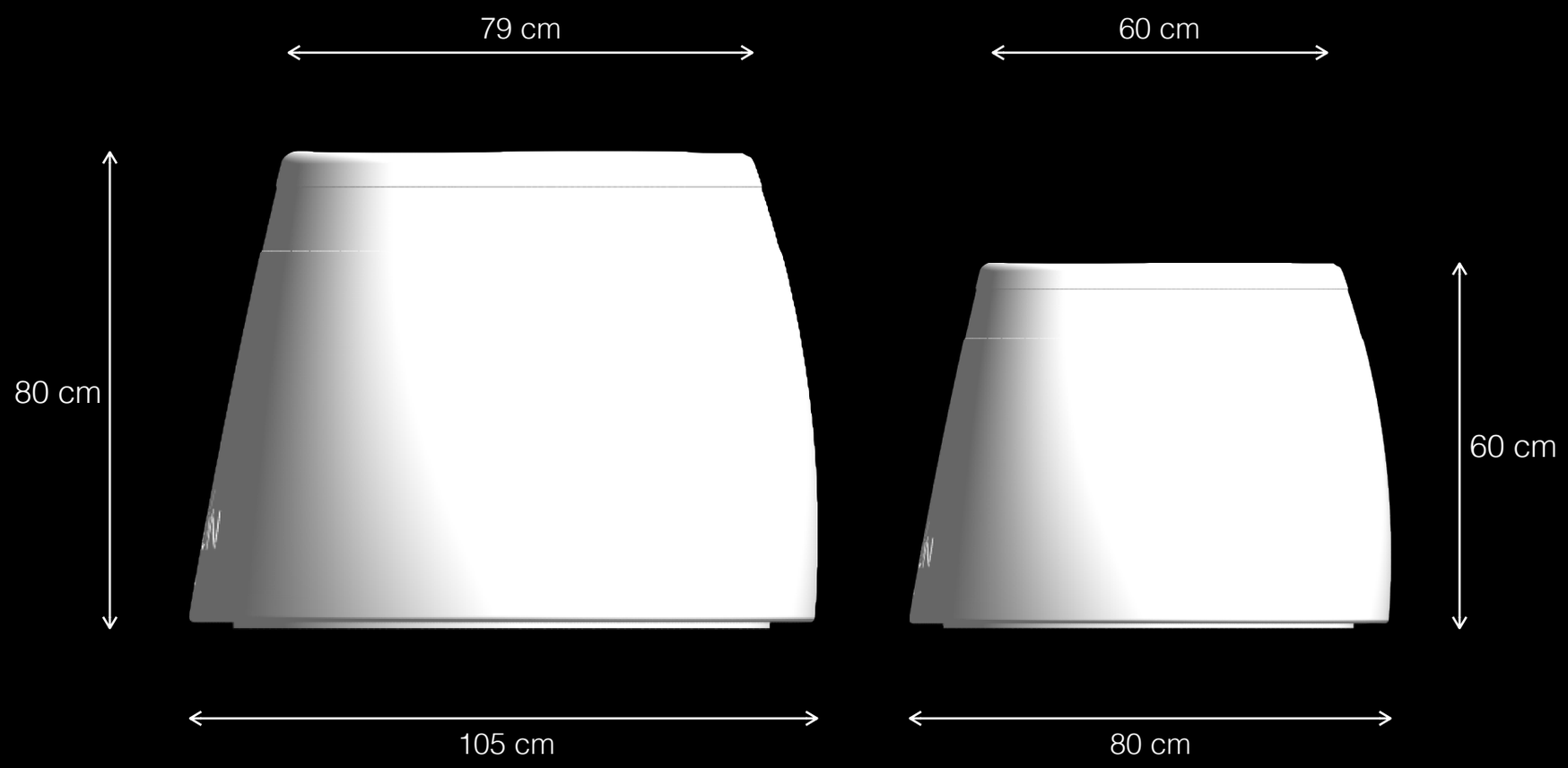

COPYRIGHT © LEMON - UPSCALE URBAN FURNITURE LTD. 1995. ALL RIGHTS RESERVED.

www.lemon-collection.com

LEMON™
Design by LEMON

Planet T1
Plants Container System

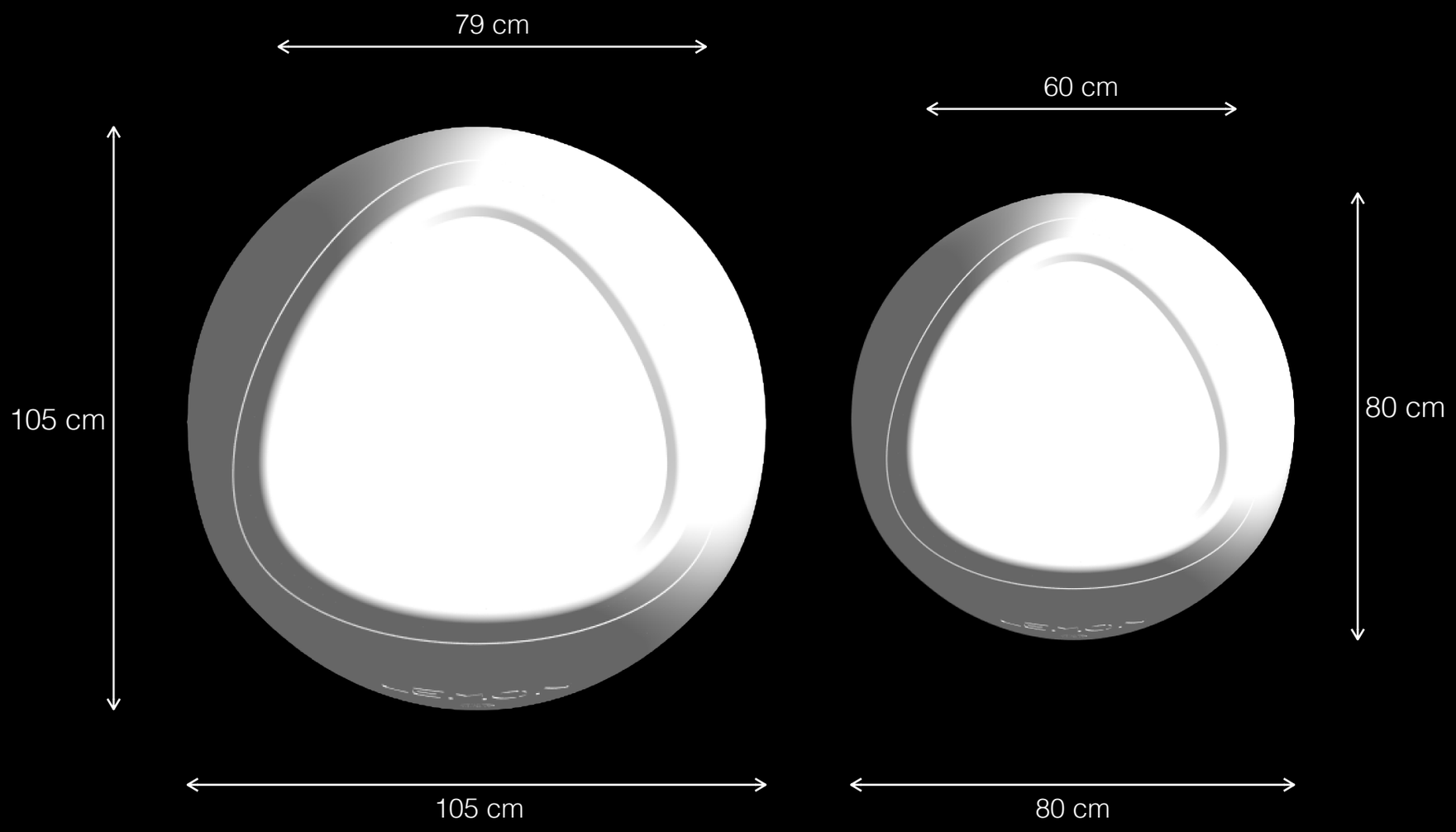

COPYRIGHT © LEMON - UPSCALE URBAN FURNITURE LTD. 1995. ALL RIGHTS RESERVED.
www.lemon-collection.com

Materials & Finishes

Architectural Concrete

COPYRIGHT © LEMON - UPSCALE URBAN FURNITURE LTD. 1995. ALL RIGHTS RESERVED.

LEMON™

UPSCALE
URBAN
FURNITURE

LEMON TLV: office@lemon-collection.com

LEMON BARCELONA: oficina@lemon-collection.com

COPYRIGHT © LEMON - UPSCALE URBAN FURNITURE LTD. 1995. ALL RIGHTS RESERVED.

www.lemon-collection.com